Constructo 202

Article number: 10001252

Series: Constructo II

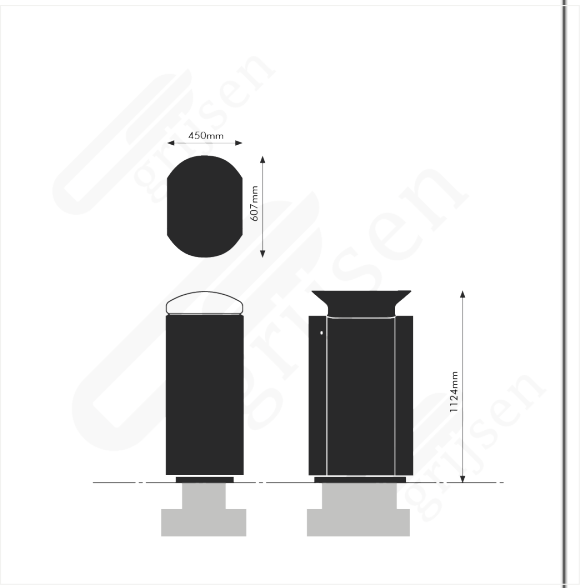

Product description

The **Constructo 202** is the largest waste bin within the Constructo II series. This makes this bin extremely suitable for busy locations where a relatively large amount of waste is generated. Besides a **large capacity**, this bin is **high quality** and user-friendly. The Constucto 202 has **no visible fasteners** and the insertion of the litter bin is slanted inwards. This prevents waste from lying around on the opening. The Constructo 202 is **fully modular** and therefore has a nice **circular base**. Optionally, the 202 can be supplied with an integrated ashtray in the hood. This waste bin is equipped with a plastic bag holder.

Extra information

Material frame:

Steel, 4 mm, hot-dip galvanized and two-layer powder coated 120 µm, in RAL colour of your choice

Material panels

Choose from these panels (each type features piano hinges):

- Steel, 2,5 mm, marquise-pattern plate, hot-dip galvanized and two-layer powder coated 120 µm in RAL color of your choice
- Steel, 2,5 mm, smooth plate, hot-dip galvanized and two-layer powder coated 120 µm in RAL color of your choice

Material inner box

- Plastic bag holder

© Copyright Grijsen international

Optional
The bin can be supplied with:

- Logo
- Ashtray on frame
- External plastic bag holder
- Ashtray in hood

Capacity
200 liter

Including concrete base?
The bin comes with concrete base

Including fireworks cover?

Yes, bottom plate is also a fireworks cover

Weight excl. concrete base
80 kilogram

View all Grijsen street furniture

Grijsen International | Lorentzstraat 13 | 7102 JH Winterswijk, The Netherlands
© Copyright Grijsen international
T: +31 (0)543 51 69 50 | E: info@grijsen-international.com | W: www.grijsen-international.com